BREAKOUT SEATING

OPERA

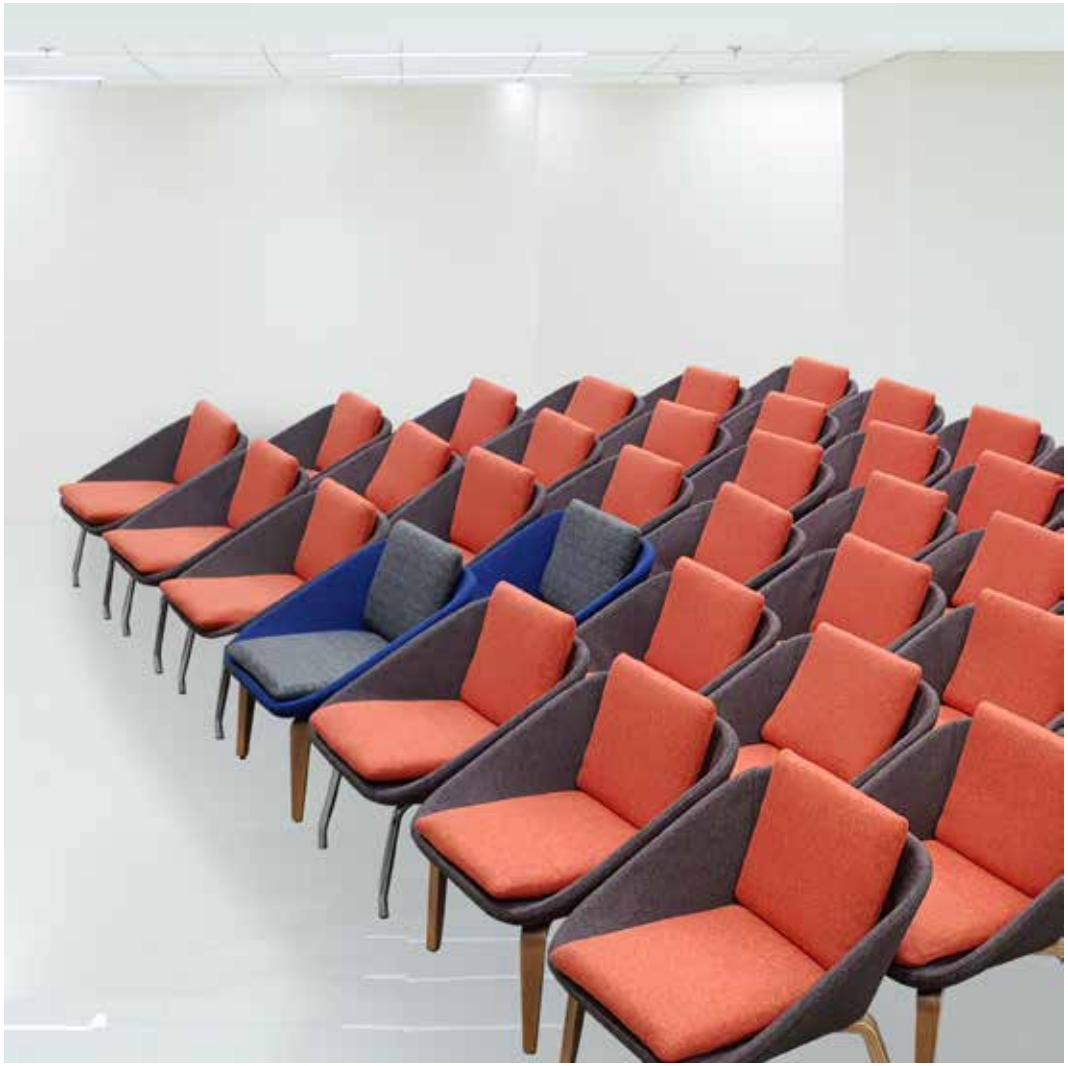

FEATURES

- Moulded foam on steel frame
- Loose back and seat cushions
- Optional plywood frame with timber legs
- Optional 700mm high arch aluminium 4 star base
- Optional chrome 4 leg frame
- High density foam
- Suitable for indoor use only
- Available in local fabrics
- 5 Year warranty
- Weight limit is 120kg

INSTRUCTIONS OF USE

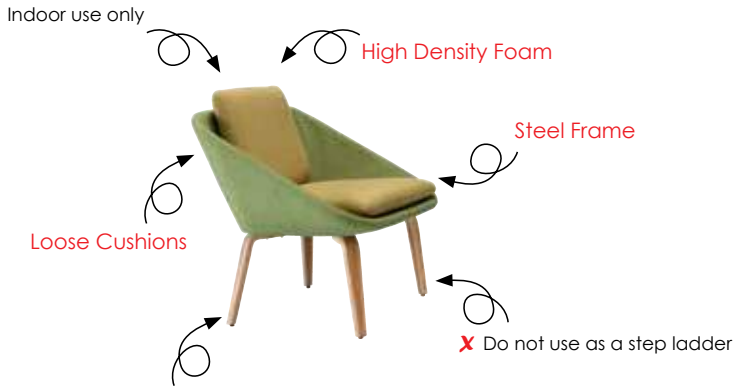

Sled Base, 4 Leg or Arch 4 Star Base

Keep a permanent contact between base of chair and floor

OPERA

WARRANTY 5 Year | WEIGHT LIMIT 120 Kilogram | UPHOLSTERED IN AUSTRALIA

OPERA-TL

OPERA-AB

OPERA-4L

SIZE

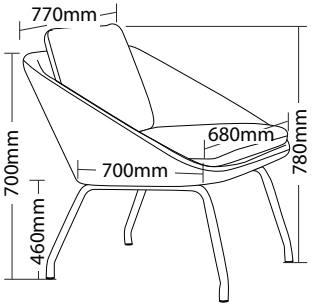

OPERA-4L

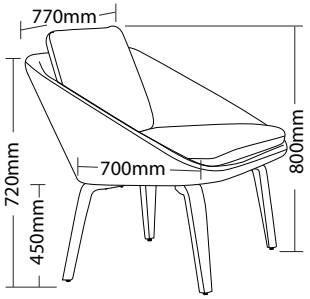

OPERA-TL

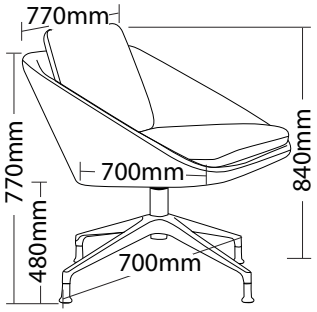

OPERA-AB

Available From:

GIANT OFFICE FURNITURE

158 Victoria Street, North Geelong
Phone: (03) 52723280
www.giantofficefurniture.com.au